ALYN

DUAL FLUSH MECHANISM

COLOUR	WHITE
MATERIAL	PLASTIC
CODE	ALYMECDFL0000UC
WEIGHT	0,56KG
INLET FILLVALVE	BOTTOM INLET WATER PRESSURE RANGE: 0.02-1.6MPA WATER LEVEL RANGE: 60-251MM ANTI SIPHON SOUND LEVEL: 72.03/72.83DB 1 YEAR GUARANTEE
FLUSH VALVE	DUAL FLUSH BUTTON FLUSH RATE: ≥ 2.4L / SECOND 2.6L SINGLE FLUSH - 4L ADJUSTABLE RESIDUAL WATER LEVEL RANGE: HALF FLUSH 120MM FULL FLUSH 53MM 1 YEAR GUARANTEE
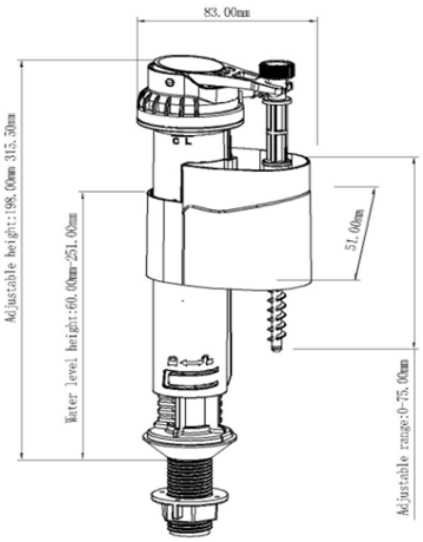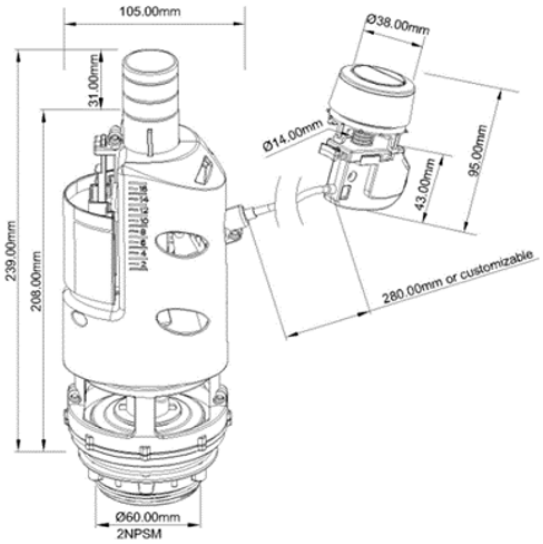
LECICO RESERVE THE RIGHT TO CHANGE THE PRODUCT WITHOUT NOTIFICATION